APEX DYNAMICS, INC.

NEW GENERATION PLANETARY GEARBOX

AH / AHX Series

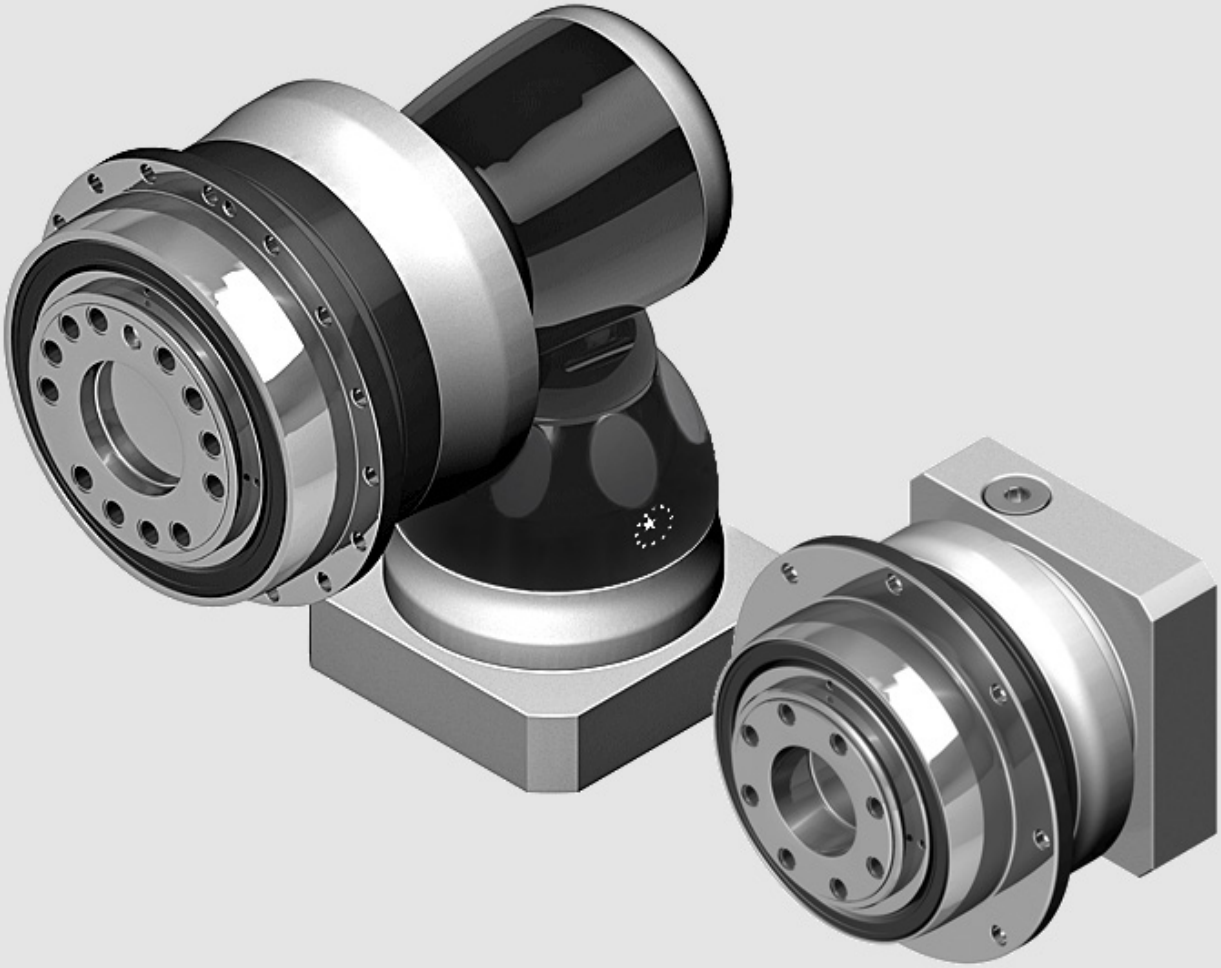

Gearbox Series - AH / AHX

Features:

High Torque
High efficiency
Long-Term persistence of reduced backlash
Low noise
Long service life
Limited temperature rise
Optimized output torque
Optimized Inertia moment
Flexible mounting diameters

Ordering Code - AH / AHX Gearbox

AH090	—	005[1]	/	MOTOR
AHX090	—	005[1]	/	MOTOR
AHXA285[3]				Motor Type
AHXB090[3]				
		Ratio		
Gearbox Size				

Gearbox Size

AH	064 / 090 / 110 / 140 / 200 / 255 / 285 / 355 / 450
AHX	064 / 090 / 110 / 140 / 200 / 255 / 285 / 355 / 450

Ratio[2]

AH	4 / 5 / 7 / 10
	16 / 20 / 21 / 25 / 28 / 31 / 35 / 40 / 46 / 50 / 61 / 70 / 91 / 100
AHX (2 Stg.)	12 / 15 / 16 / 20 / 25 / 28 / 35 / 40 / 49 / 50 / 70 / 100
AHXA (3 Stg.)	100 / 125 / 140 / 175 / 200 / 250 / 350 / 500 / 700 / 1,000
AHXB (3 Stg.)	64 / 84 / 100 / 125 / 140 / 175 / 200 / 250 / 280 / 350 / 400 / 500 / 700 / 1,000
AHX (4 Stg.)	1,225 / 1,400 / 1,750 / 2,000 / 2,800 / 3,500 / 5,000 / 7,000 / 10,000
AHXC	4 / 5 / 7 / 8 / 10 / 21 / 31 / 46 / 61 / 91

Motor Type
Manufacturer and Model

(1) Ratio ($i = N_{in} / N_{out}$).
(2) Please refer to the specifications for the ratios provided in each series.
(3) Please refer to page 06.

©2017 by APEX DYNAMICS, INC.
APEX DYNAMICS, INC. reserves modification and copyrights of all technical specifications, illustrations and drawings in this catalog in allowance for continuous products development and advancement.
For the newest data and information, please visit http://www.apexdyna.com/

Performance - AH Gearbox

Model No.		Stage	Ratio[1]	AH064	AH090	AH110	AH140	AH200	AH255	AH285	AH355	AH450
Nominal Output Torque T_{2N}	Nm	1	4	95	195	350	600	1,290	-	-	-	-
			5	80	165	305	525	1,145	1,745	3,285	-	-
			7	60	130	250	435	980	1,495	2,525	-	-
			10	24	55	160	305	700	1,070	1,810	-	-
		2	16	95	195	360	615	1,320	-	-	-	-
			20	95	200	360	615	1,320	1,770	3,325	-	-
			21	80	165	310	535	1,165	1,770	3,330	5,595	10,915
			25	80	165	310	535	1,165	1,770	3,330	-	-
			28	60	200	360	615	1,325	-	-	-	-
			31	60	130	250	440	990	1,510	2,550	4,810	9,565
			35	70	170	310	535	1,165	1,775	3,335	-	-
			40	40	96	220	615	1,215	-	-	-	-
			46	24	55	160	295	660	1,005	1,700	3,400	7,125
			50	50	120	275	535	1,170	1,775	3,340	-	-
			61	60	130	250	440	990	1,510	2,550	4,820	9,585
			70	60	130	250	440	990	1,510	2,550	-	-
			91	24	55	160	295	660	1,005	1,700	3,345	7,000
			100	24	55	160	295	660	1,005	1,700	-	-
Emergency Stop Torque T_{2NOT}	Nm	1,2	4~100	3 times T_{2N}								
Max. Acceleration Torque T_{2B}	Nm	1,2	4~100	1.5 times T_{2N}								
No Load Running Torque[3]	Nm	1	4~10	0.45	0.7	1.4	3.5	7	11	14	-	-
		2	16~100	0.2	0.3	0.6	1.3	2.2	3.5	4.5	13	21
Backlash[2]	arcmin	1	4~10	≦ 2	≦ 1	≦ 1	≦ 1	≦ 1	≦ 1	≦ 1	-	-
		2	16~100	≦ 3	≦ 2	≦ 2	≦ 2	≦ 2	≦ 2	≦ 2	≦ 2	≦ 2
Torsional Rigidity	Nm/arcmin	1,2	4~100	8	22	60	115	395	650	1,050	2,850	5,700
Nominal Input Speed n_{1N}	rpm	1	4~10	5,000	3,600	3,600	3,000	2,700	2,400	2,100	-	-
		2	16~100	5,000	4,600	4,600	4,000	3,700	3,400	3,100	2,500	2,000
Max. Input Speed n_{1B}	rpm	1	4~10	7,000	6,000	6,000	5,000	4,500	4,000	3,500	-	-
		2	16~100	7,000	7,000	7,000	6,000	5,500	5,000	4,500	4,000	3,500
Max. Axial Load F_{2a}[4]	N	1,2	4~100	1,690	2,220	4,070	8,530	17,000	26,900	39,200	101,500	143,700
Max. Tilting Moment M_{2K}[4]	Nm	1,2	4~100	120	280	480	1,310	3,530	5,920	9,230	29,100	63,300
Operating Temp	° C	1,2	4~100	-10° C~ 90° C								
Degree of Gearbox Protection		1,2	4~100	IP65								
Lubrication		1,2	4~100	Synthetic lubrication grease								
Mounting Position		1,2	4~100	All directions								
Running Noise[3]	dB(A)	1	4~10	≦ 58	≦ 59	≦ 64	≦ 65	≦ 66	≦ 66	≦ 66	-	-
		2	16~100	≦ 58	≦ 59	≦ 60	≦ 63	≦ 66	≦ 66	≦ 66	≦ 68	≦ 70
Efficiency η	%	1	4~10	≧ 97%								
		2	16~100	≧ 94%								

(1) Ratio ($i = N_{in} / N_{out}$) .

(2) Backlash is measured at 2% of Nominal Output Torque T_{2N} .

(3) The dB values are measured by gearbox with ratio 10 (1-stage) or ratio 100 (2-stage), no loading at 3,000 RPM or at the respective Nominal Input Speed by bigger model size.
By lower ratio and/or higher RPM, the noise level could be 3 to 5 dB higher.

(4) Applied to the output flange center at 100 rpm.

(5) Continuous operation is not recommended.

(6) 5 years warranty.

Inertia - AH Gearbox

Model No.		AH064		AH090		AH110		AH140		AH200		AH255		AH285		AH355	AH450
Ø(A) (C3)		1-st.	2-st.	1-st.	2-st.	1-st.	2-st.	1-st.	2-st.	1-st.	2-st.	1-st.	2-st.	1-st.	2-st.	2-st.	2-st.
8	kg.cm²	-	0.1	-	-	-	-	-	-	-	-	-	-	-	-	-	-
11		0.17	0.16	-	0.17	-	-	-	-	-	-	-	-	-	-	-	-
14		0.21	0.2	0.53	0.21	-	0.53	-	-	-	-	-	-	-	-	-	-
19		0.63	-	0.68	0.63	1.83	0.68	-	1.83	-	-	-	-	-	-	-	-
24		-	-	4.52	-	5.04	4.52	5.63	5.04	-	5.63	-	-	-	-	-	-
28		-	-	-	-	6.33	-	7.18	6.33	-	7.18	-	-	-	-	-	-
32		-	-	-	-	8.73	-	10.1	8.73	12.63	10.1	-	12.63	-	-	-	-
35		-	-	-	-	14.04	-	15.54	14.04	17.75	15.54	17.35	17.75	28.18	20.8	-	-
38		-	-	-	-	19.05	-	21.32	19.05	23.26	21.32	23.61	23.26	28.18	27.05	23.6	-
42		-	-	-	-	-	-	23.2	-	25.4	23.2	25.5	25.4	30.52	28.95	25.37	30.37
48		-	-	-	-	-	-	56.07	-	61.02	56.07	61.22	61.02	66.85	64.66	89.35	96.45
55		-	-	-	-	-	-	-	-	-	-	88.86	-	94.91	-	102	109.06
60		-	-	-	-	-	-	-	-	-	-	-	-	117.73	-	-	117.75

(A) Ø = Input shaft diameter.

Flange Shaft - AH

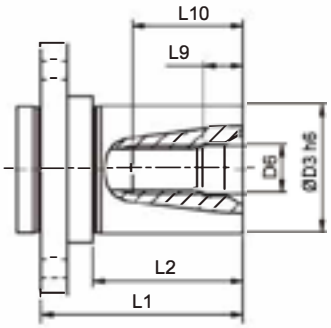

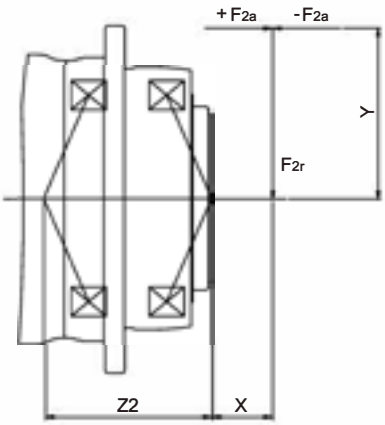

$$M_{2K} = \frac{F_{2a} * Y + F_{2r} * (X+Z2)}{1000}$$

M_{2K} : 【Nm】

F_{2a}, F_{2r} : 【N】

X,Y,Z2 : 【mm】

Dimension	L1	L2	D3 h6	D6	L9	L10	Order Code
AH064	33	23	16	M5	4.8	12.5	FLS-AH064-S16
			22	M8	7.2	19	FLS-AH064-S22
AH090	41	30	22	M8	7.2	19	FLS-AH090-S22
			32	M12	10	28	FLS-AH090-S32
AH110	51	38	32	M12	10	28	FLS-AH110-S32
			40	M16	12	36	FLS-AH110-S40
AH140	54	38	40	M16	12	36	FLS-AH140-S40
			55	M20	15	42	FLS-AH140-S55
AH200	73	52	55	M20	15	42	FLS-AH200-S55
			75	M20	15	42	FLS-AH200-S75
AH255	150	123	90	M24	18	50	FLS-AH255-S90

Note: Dimensions are related to gearbox flange interface.

M2K

AH / AHX	064	090	110	140	200	255	285	355	450
Z2 【mm】	63.7	84.5	106.2	90	122.8	133.2	175.5	220.6	275.3

Note : Applied to the output flange center at 100 rpm

Dimension AH Gearbox

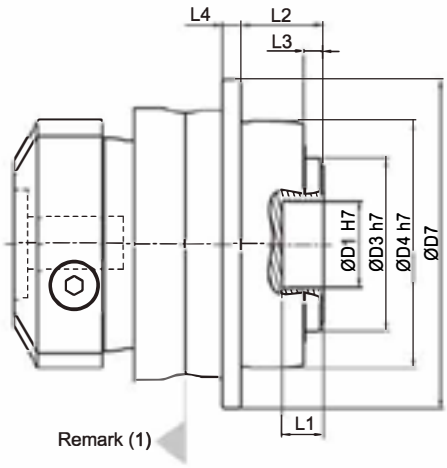

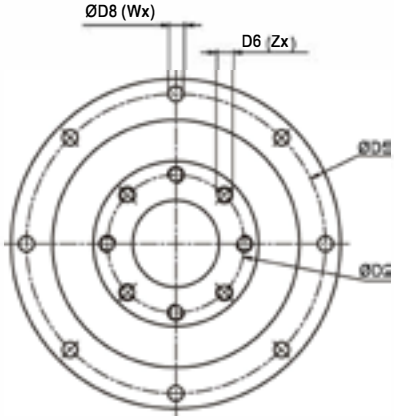

AH 064

AH 090

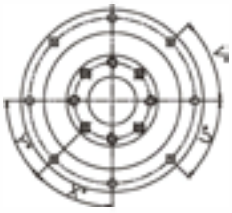

AH 110

AH 140

AH 200

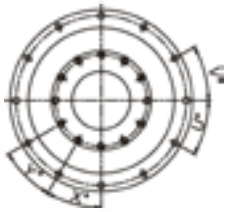

AH 255

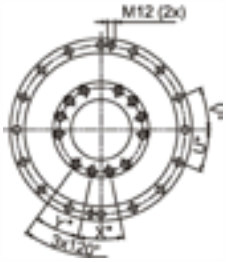

AH 285

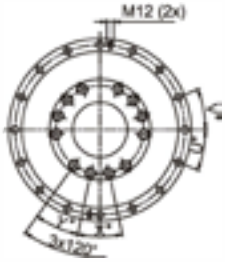

AH 355

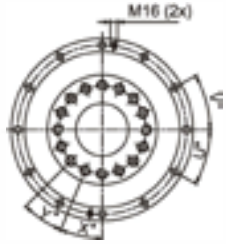

AH 450

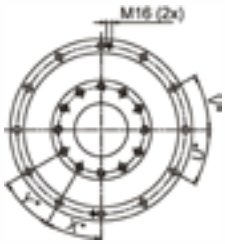

Dimension	AH064	AH090	AH110	AH140	AH200	AH255	AH285	AH355	AH450
D1 H7	20	31.5	40	50	80	100	100	120	155
D2	31.5	50	63	80	125	140	160	200	250
D3 h7	40	63	80	100	160	180	200	250	315
D4 h7	64	90	110	140	200	255	285	355	450
D5	79	109	135	168	233	280	310	385	490
D6 x Pitch x Deep	M5x0.8Px8	M6x1Px10	M6x1Px11	M8x1.25Px15	M10x1.5Px20	M16x2Px25	M20x2.5Px31	M24x3Px32	M30x3.5Px40
D7	88	120	147	180	249.5	302	332	415	530
D8	4.5	5.5	5.5	6.6	9	13.5	13.5	17.5	22
L1	8	15	15	15	16	16	16	35	24
L2	19.5	30	29	38	50	66	75	80	85
L3	4	7	7	7.5	8.5	13.5	16.5	20	20
L4	5	7	8	10	12	18	20	45	60
X in Degree	45	45	22.5	30	30	24	24	22.5	30
Y in Degree	45	45	22.5	30	30	24	24	22.5	30
Z	8	8	12	12	12	12	12	16	12
U in Degree	45	45	45	30	30	22.5	22.5	30	30
V in Degree	45	45	45	30	30	22.5	22.5	30	30
W	8	8	8	12	12	16	16	12	12

Note: Dimensions are related to motor interface. Please contact APEX for details.

AHX Gearbox

AHX Structure

(I)

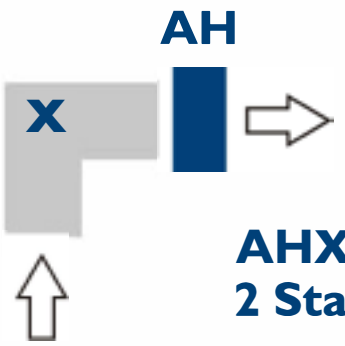

AHX
2 Stage

(II)

AHXA
3 Stage

(III)

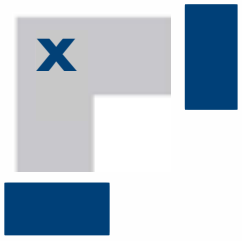

AHXB
3 Stage

(IV)

AHX
4 Stage

Performance - AHX (2 Stage) Gearbox

Model No.		Stage	Ratio[1]	AHX064	AHX090	AHX110	AHX140	AHX200	AHX255	AHX285	AHX355
Nominal Output Torque T_{2N}	Nm	2	12	95	195	360	615	1,315	-	-	-
			15	-	-	-	-	-	1,770	3,330	5,595
			16	95	200	360	615	1,320	-	-	-
			20	95	200	360	615	1,320	1,775	3,335	5,605
			25	80	170	310	535	1,165	1,775	3,335	5,610
			28	92	200	360	615	1,325	-	-	-
			35	80	170	310	535	1,170	1,775	3,340	5,615
			40	60	160	340	615	1,325	-	-	-
			49	60	130	250	440	990	1,510	2,550	4,820
			50	50	170	310	535	1,170	1,775	3,000	5,500
			70	60	130	250	440	990	1,510	2,550	4,820
			100	24	55	160	290	655	1,005	1,685	3,315
Emergency Stop Torque T_{2NOT}	Nm	2	12~100	2 times T_{2N}							
Max. Acceleration Torque T_{2B}	Nm	2	12~100	1.5 times T_{2N}							
No Load Running Torque[3]	Nm	2	12~100	1	1.3	2	3.1	6	13	16	20
Backlash[2]	arcmin	2	12~100	≦ 3	≦ 2	≦ 2	≦ 2	≦ 2	≦ 2	≦ 2	≦ 2
Torsional Rigidity	Nm/arcmin	2	12~100	12	27	56	112	389	642	1,275	2,500
Nominal Input Speed n_{1N}	rpm	2	12~100	3,000	3,000	2,800	2,700	2,200	2,100	2,000	1,600
Max. Input Speed n_{1B}	rpm	2	12~100	6,000	6,000	6,000	4,500	4,500	4,000	3,000	2,500
Max. Axial Load F_{2a}[4]	N	2	12~100	1,690	2,220	4,070	8,530	17,000	26,900	39,200	101,500
Max. Tilting Moment M_{2K}[4]	Nm	2	12~100	120	280	480	1,310	3,530	5,920	9,230	29,100
Operating Temp	° C	2	12~100	-10° C~ 90° C							
Degree of Gearbox Protection		2	12~100	IP65							
Lubrication		2	12~100	Synthetic lubrication grease							
Mounting Position		2	12~100	All directions							
Running Noise[3]	dB(A)	2	12~100	≦ 64	≦ 66	≦ 68	≦ 68	≦ 70	≦ 70	≦ 72	≦ 74
Efficiency η	%	2	12~100	≧ 94%							

(1) Ratio ($i = N_{in} / N_{out}$) .
(2) Backlash is measured at 2% of Nominal Output Torque T_{2N} .
(3) The dB values are measured by gearbox with ratio 100 (2-stage), no loading at 3,000 RPM
or at the respective Nominal Input Speed by bigger model size.
By lower ratio and/or higher RPM, the noise level could be 3 to 5 dB higher.
(4) Applied to the output flange center at 100 rpm.
(5) Continuous operation is not recommended.
(6) 5 years warranty.

Inertia - AHX (2 Stage) Gearbox

Input Shaft (C3) Ø[A] \ Model No.		AHX064	AHX090	AHX110	AHX140	AHX200	AHX255	AHX285	AHX355
8	kg.cm²	0.1	-	-	-	-	-	-	-
11		0.17	0.18	-	-	-	-	-	-
14		0.21	0.5	0.52	-	-	-	-	-
19		-	0.65	1.69	1.71	-	-	-	-
24		-	-	4.89	5.05	6.92	-	-	-
28		-	-	-	6.55	6.98	-	-	-
32		-	-	-	9.47	10.18	10.18	-	-
35		-	-	-	14.91	15.21	15.21	15.68	-
38		-	-	-	20.69	20.7	20.7	21.69	23.46
42		-	-	-	-	22.83	22.83	23.59	25.28
48		-	-	-	-	58.45	58.45	59.3	61.61
55		-	-	-	-	-	-	-	89.67

(A) Ø = Input shaft diameter.

Dimension AHX（2 Stage）Gearbox （Ratio i＝12~100）

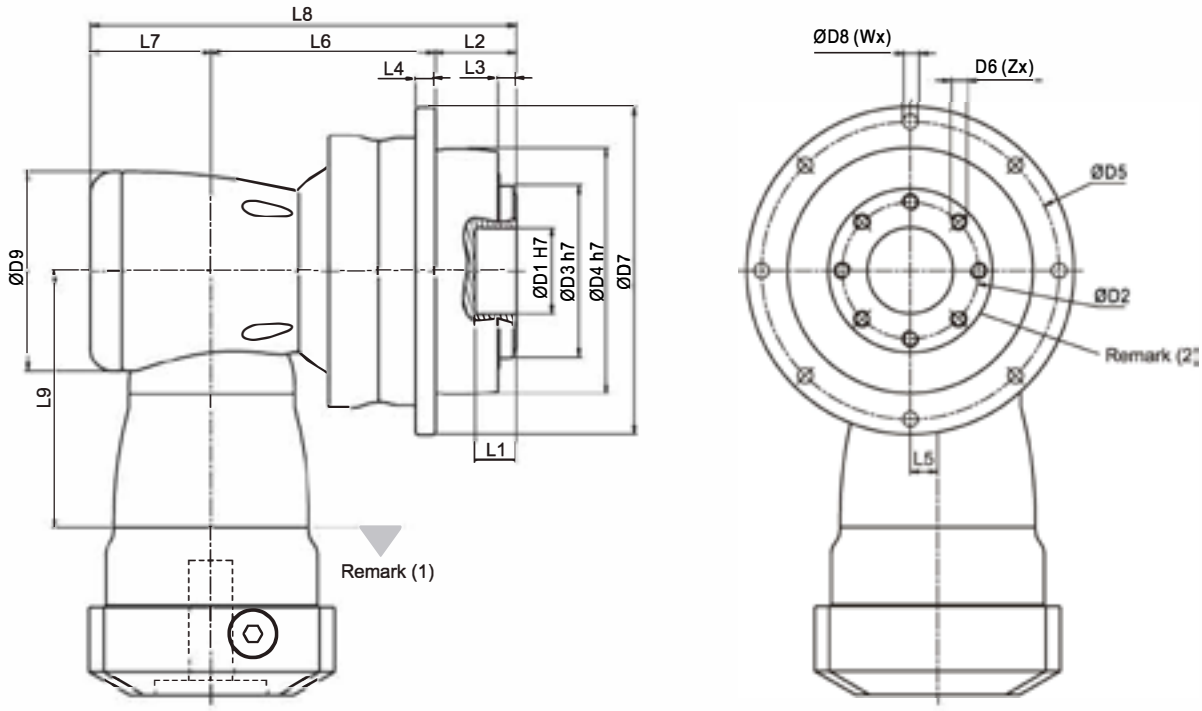

Dimension	AHX064	AHX090	AHX110	AHX140	AHX200	AHX255	AHX285	AHX355
D1 H7	20	31.5	40	50	80	100	100	120
D2	31.5	50	63	80	125	140	160	200
D3 h7	40	63	80	100	160	180	200	250
D4 h7	64	90	110	140	200	255	285	355
D5	79	109	135	168	233	280	310	385
D6 x Pitch x Deep	M5x0.8Px8	M6x1Px10	M6x1Px11	M8x1.25Px15	M10x1.5Px20	M16x2Px25	M20x2.5Px31	M24x3Px32
D7	88	120	147	180	249.5	302	332	415
D8	4.5	5.5	5.5	6.6	9	13.5	13.5	17.5
D9	73	94	116	163	210	210	255	300
L1	8	15	15	15	16	16	16	35
L2	19.5	30	29	38	50	66	75	80
L3	4	7	7	7.5	8.5	13.5	16.5	20
L4	5	7	8	10	12	18	20	45
L5	10	13	17	25	31	31	36	43
L6	87	90.5	114	147.5	175	191.5	249.5	290
L7	44.5	53	68.3	89	115	115	131	165
L8	151	173.5	211.3	274.5	340	372.5	455.5	535
L9	94	114.5	129	173.5	228	228	265.5	294.5
X in Degree	45	45	22.5	30	30	24	24	22.5
Y in Degree	45	45	22.5	30	30	24	24	22.5
Z	8	8	12	12	12	12	12	16
U in Degree	45	45	45	30	30	22.5	22.5	30
V in Degree	45	45	45	30	30	22.5	22.5	30
W	8	8	8	12	12	16	16	12

(1) Dimensions are related to motor interface. Please contact APEX for details.
(2) Refer to the AH series(Page 05) for flange interface.

Performance - AHXA（3 Stage）Gearbox

Model No.		Stage	Ratio[1]	AHXA285	AHXA355	AHXA450
Nominal Output Torque T_{2N}	Nm	3	100	3,345	5,620	10,965
			125	3,345	5,625	10,970
			140	3,345	5,625	10,970
			175	3,345	5,625	10,970
			200	3,345	5,625	10,975
			250	3,345	5,625	10,975
			350	3,345	5,630	10,975
			500	3,345	5,350	9,050
			700	2,555	4,825	9,600
			1,000	1,650	3,250	6,785
Emergency Stop Torque T_{2NOT}	Nm	3	100~1,000	2 times T_{2N}		
Max. Acceleration Torque T_{2B}	Nm	3	100~1,000	1.5 times T_{2N}		
No Load Running Torque[3]	Nm	3	100~1,000	6	6	13
Backlash[2]	arcmin	3	100~1,000	≦ 2	≦ 2	≦ 2
Torsional Rigidity	Nm/arcmin	3	100~1,000	1,275	2,500	5,100
Nominal Input Speed n_{1N}	rpm	3	100~1,000	2,100	2,100	2,000
Max. Input Speed n_{1B}	rpm	3	100~1,000	4,000	4,000	3,000
Max. Axial Load F_{2a}[4]	N	3	100~1,000	39,200	101,500	143,700
Max. Tilting Moment M_{2K}[4]	Nm	3	100~1,000	9,230	29,100	63,300
Operating Temp	° C	3	100~1,000	-10° C~ 90° C		
Degree of Gearbox Protection		3	100~1,000	IP65		
Lubrication		3	100~1,000	Synthetic lubrication grease		
Mounting Position		3	100~1,000	All directions		
Running Noise[3]	dB(A)	3	100~1,000	≦ 72	≦ 74	≦ 76
Efficiency η	%	3	100~1,000	≧ 92%		

(1) Ratio ($i = N_{in} / N_{out}$) .
(2) Backlash is measured at 2% of Nominal Output Torque T_{2N} .
(3) The dB values are measured by gearbox with ratio 1,000 (3-stage), no loading at 3,000 RPM
or at the respective Nominal Input Speed by bigger model size.
By lower ratio and/or higher RPM, the noise level could be 3 to 5 dB higher.
(4) Applied to the output flange center at 100 rpm.
(5) Continuous operation is not recommended.
(6) 5 years warranty.

Inertia - AHXA（3 Stage）Gearbox

Input Shaft (C3) Ø[A] \ Model No.		AHXA285	AHXA355	AHXA450
32	kg.cm²	10.18	10.18	-
35		15.21	15.21	15.68
38		20.7	20.7	21.69
42		22.83	22.83	23.59
48		58.45	58.45	59.3
55		-	-	86.95

(A) Ø = Input shaft diameter.

Dimension AHXA (3 Stage) Gearbox (Ratio i = 100~1,000)

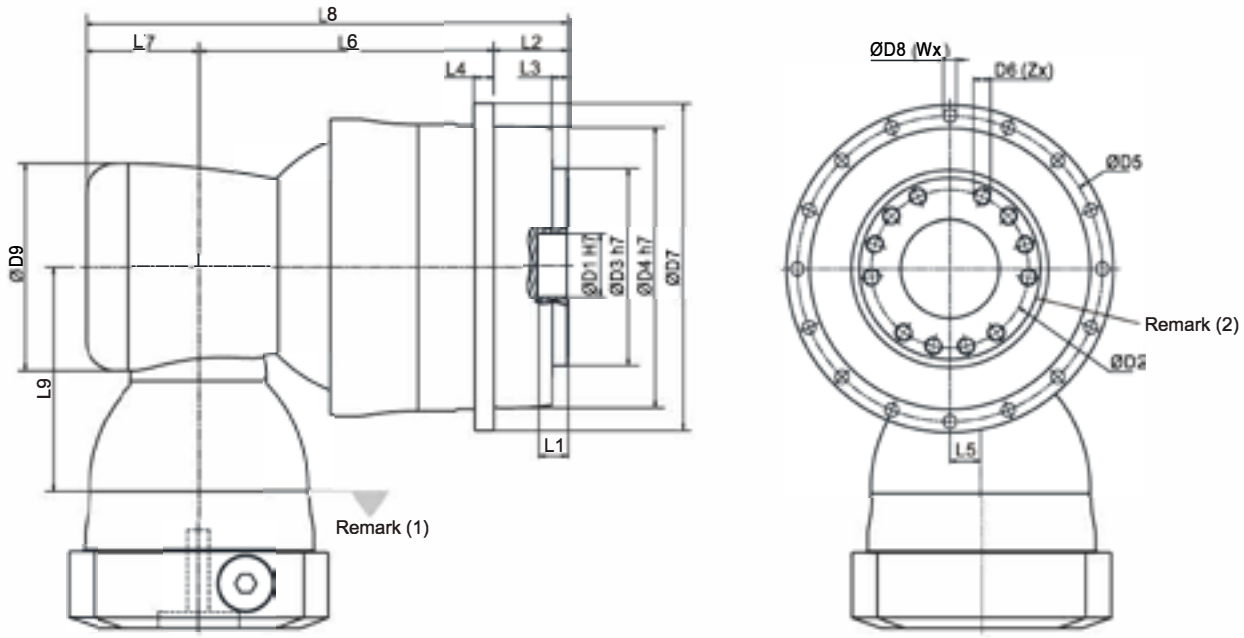

Dimension	AHXA285	AHXA355	AHXA450
D1 H7	100	120	155
D2	160	200	250
D3 h7	200	250	315
D4 h7	285	355	450
D5	310	385	490
D6 x Pitch x Deep	M20x2.5Px31	M24x3Px32	M30x3.5Px40
D7	332	415	530
D8	13.5	17.5	22
D9	210	210	255
L1	16	35	24
L2	75	80	85
L3	16.5	20	20
L4	20	45	60
L5	31	31	36
L6	300	332	447.5
L7	115	115	131
L8	490	527	663.5
L9	228	228	265.5
X in Degree	24	22.5	30
Y in Degree	24	22.5	30
Z	12	16	12
U in Degree	22.5	30	30
V in Degree	22.5	30	30
W	16	12	12

(1) Dimensions are related to motor interface. Please contact APEX for details.
(2) Refer to the AH series (Page 05) for flange interface.

Performance - AHXB（3 Stage）Gearbox

Model No.		Stage	Ratio[1]	AHXB090	AHXB110	AHXB140	AHXB200	AHXB255	AHXB285	AHXB355
Nominal Output Torque T_{2N}	Nm	3	64	200	360	615	1,325	-	-	-
			84	200	360	620	1,325	-	-	-
			100	200	360	620	1,330	1,780	3,345	5,620
			125	170	310	535	1,170	1,780	3,345	5,625
			140	200	360	620	1,330	1,780	3,345	5,625
			175	170	310	535	1,170	1,780	3,345	5,625
			200	200	360	620	1,330	1,780	3,345	5,625
			250	170	310	535	1,170	1,780	3,345	5,625
			280	200	360	620	1,330	1,510	-	-
			350	170	310	535	1,170	1,775	3,345	5,630
			400	160	340	620	1,330	-	-	-
			500	170	310	535	1,170	1,780	3,000	5,500
			700	130	250	440	990	1,510	2,555	4,825
			1,000	55	160	290	640	980	1,655	3,250
Emergency Stop Torque T_{2NOT}	Nm	3	64~1,000	2 times T_{2N}						
Max. Acceleration Torque T_{2B}	Nm	3	64~1,000	1.5 times T_{2N}						
No Load Running Torque[3]	Nm	3	64~1,000	0.2	0.2	0.3	0.4	1	1.2	1.5
Backlash[2]	arcmin	3	64~1,000	≦ 2	≦ 2	≦ 2	≦ 2	≦ 2	≦ 2	≦ 2
Torsional Rigidity	Nm/arcmin	3	64~1,000	27	56	112	389	642	1,275	2,500
Nominal Input Speed n_{1N}	rpm	3	64~1,000	5,500	4,600	4,600	4,000	3,700	3,400	3,100
Max. Input Speed n_{1B}	rpm	3	64~1,000	7,000	7,000	7,000	6,000	5,500	5,000	4,500
Max. Axial Load F_{2a}[4]	N	3	64~1,000	2,220	4,070	8,530	17,000	26,900	39,200	101,500
Max. Tilting Moment M_{2K}[4]	Nm	3	64~1,000	280	480	1,310	3,530	5,920	9,230	29,100
Operating Temp	° C	3	64~1,000	-10° C~ 90° C						
Degree of Gearbox Protection		3	64~1,000	IP65						
Lubrication		3	64~1,000	Synthetic lubrication grease						
Mounting Position		3	64~1,000	All directions						
Running Noise[3]	dB(A)	3	64~1,000	≦ 66	≦ 68	≦ 68	≦ 70	≦ 70	≦ 72	≦ 74
Efficiency η	%	3	64~1,000	≧ 92%						

(1) Ratio ($i = N_{in} / N_{out}$) .

(2) Backlash is measured at 2% of Nominal Output Torque T_{2N} .

(3) The dB values are measured by gearbox with ratio 1,000 (3-stage), no loading at 3,000 RPM or at the respective Nominal Input Speed by bigger model size. By lower ratio and/or higher RPM, the noise level could be 3 to 5 dB higher.

(4) Applied to the output flange center at 100 rpm.

(5) Continuous operation is not recommended.

(6) 5 years warranty.

Inertia - AHXB（3 Stage）Gearbox

Input Shaft (C3) Ø[A] \ Model No.		AHXB090	AHXB110	AHXB140	AHXB200	AHXB255	AHXB285	AHXB355
8	kg.cm²	0.17	-	-	-	-	-	-
11		0.17	0.52	-	-	-	-	-
14		0.21	0.53	1.83	-	-	-	-
19		-	0.68	1.83	5.6	-	-	-
24		-	-	5.04	5.63	5.63	-	-
28		-	-	-	7.18	7.18	-	-
32		-	-	-	10.1	10.1	12.63	-
35		-	-	-	15.54	15.54	17.75	17.35
38		-	-	-	21.32	21.32	23.26	23.61
42		-	-	-	-	23.2	25.4	25.5
48		-	-	-	-	56.07	61.02	61.22

(A) Ø = Input shaft diameter.

Dimension AHXB（3 Stage）Gearbox （Ratio i＝64~1,000）

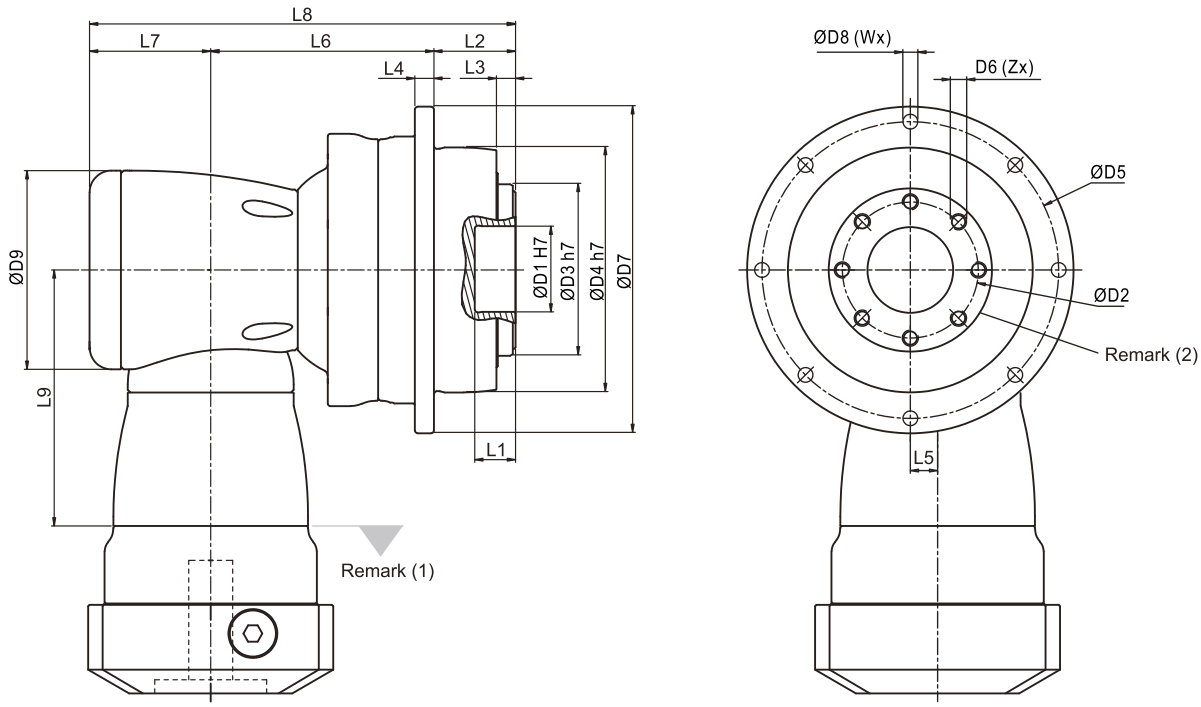

Dimension	AHXB090	AHXB110	AHXB140	AHXB200	AHXB255	AHXB285	AHXB355
D1 H7	31.5	40	50	80	100	100	120
D2	50	63	80	125	140	160	200
D3 h7	63	80	100	160	180	200	250
D4 h7	90	110	140	200	255	285	355
D5	109	135	168	233	280	310	385
D6 x Pitch x Deep	M6x1Px10	M6x1Px11	M8x1.25Px15	M10x1.5Px20	M16x2Px25	M20x2.5Px31	M24x3Px32
D7	120	147	180	249.5	302	332	415
D8	5.5	5.5	6.6	9	13.5	13.5	17.5
D9	94	116	163	210	210	255	300
L1	15	15	15	16	16	16	35
L2	30	29	38	50	66	75	80
L3	7	7	7.5	8.5	13.5	16.5	20
L4	7	8	10	12	18	20	45
L5	13	17	25	31	31	36	43
L6	90.5	114	147.5	175	191.5	249.5	290
L7	53	68.3	89	115	115	131	165
L8	173.5	211.3	274.5	340	372.5	455.5	535
L9	114.5	129	173.5	228	228	265.5	294.5
X in Degree	45	22.5	30	30	24	24	22.5
Y in Degree	45	22.5	30	30	24	24	22.5
Z	8	12	12	12	12	12	16
U in Degree	45	45	30	30	22.5	22.5	30
V in Degree	45	45	30	30	22.5	22.5	30
W	8	8	12	12	16	16	12

(1) Dimensions are related to motor interface. Please contact APEX for details.
(2) Refer to the AH series(Page 05) for flange interface.

Performance - AHX (4 Stage) Gearbox

Model No.		Stage	Ratio[1]	AHX285	AHX355	AHX450
Nominal Output Torque T_{2N}	Nm	4	1,225	3,350	5,630	10,980
			1,400	3,350	5,630	10,980
			1,750	3,350	5,630	10,980
			2,000	3,350	5,630	10,980
			2,800	2,555	4,825	9,600
			3,500	3,350	5,630	10,980
			5,000	3,350	5,350	9,050
			7,000	2,625	4,960	10,115
			10,000	1,975	3,870	8,325
Emergency Stop Torque T_{2NOT}	Nm	4	1,225~10,000	2 times T_{2N}		
Max. Acceleration Torque T_{2B}	Nm	4	1,225~10,000	1.5 times T_{2N}		
No Load Running Torque[3]	Nm	4	1,225~10,000	0.4	0.4	1
Backlash[2]	arcmin	4	1,225~10,000	≦ 2	≦ 2	≦ 2
Torsional Rigidity	Nm/arcmin	4	1,225~10,000	1,275	2,500	5,100
Nominal Input Speed n_{1N}	rpm	4	1,225~10,000	3,700	3,700	3,400
Max. Input Speed n_{1B}	rpm	4	1,225~10,000	5,500	5,500	5,000
Max. Axial Load F_{2a}[4]	N	4	1,225~10,000	39,200	101,500	143,700
Max. Tilting Moment M_{2K}[4]	Nm	4	1,225~10,000	9,230	29,100	63,300
Operating Temp	° C	4	1,225~10,000	-10° C~ 90° C		
Degree of Gearbox Protection		4	1,225~10,000	IP65		
Lubrication		4	1,225~10,000	Synthetic lubrication grease		
Mounting Position		4	1,225~10,000	All directions		
Running Noise[3]	dB(A)	4	1,225~10,000	≦ 72	≦ 74	≦ 76
Efficiency η	%	4	1,225~10,000	≧ 90%		

(1) Ratio ($i = N_{in} / N_{out}$) .
(2) Backlash is measured at 2% of Nominal Output Torque T_{2N} .
(3) The dB values are measured by gearbox with ratio 10,000 (4-stage), no loading at 3,000 RPM or at the respective Nominal Input Speed by bigger model size.
By lower ratio and/or higher RPM, the noise level could be 3 to 5 dB higher.
(4) Applied to the output flange center at 100 rpm.
(5) Continuous operation is not recommended.
(6) 5 years warranty.

Inertia - AHX (4 Stage) Gearbox

Input Shaft (C3) Ø[A] \ Model No.		AHX285	AHX355	AHX450
24	kg.cm²	5.63	5.63	-
28		7.18	7.18	-
32		10.1	10.1	12.63
35		15.54	15.54	17.75
38		21.32	21.32	23.26

(A) Ø = Input shaft diameter.

Dimension AHX（4 Stage）Gearbox（Ratio i＝1,225~10,000）

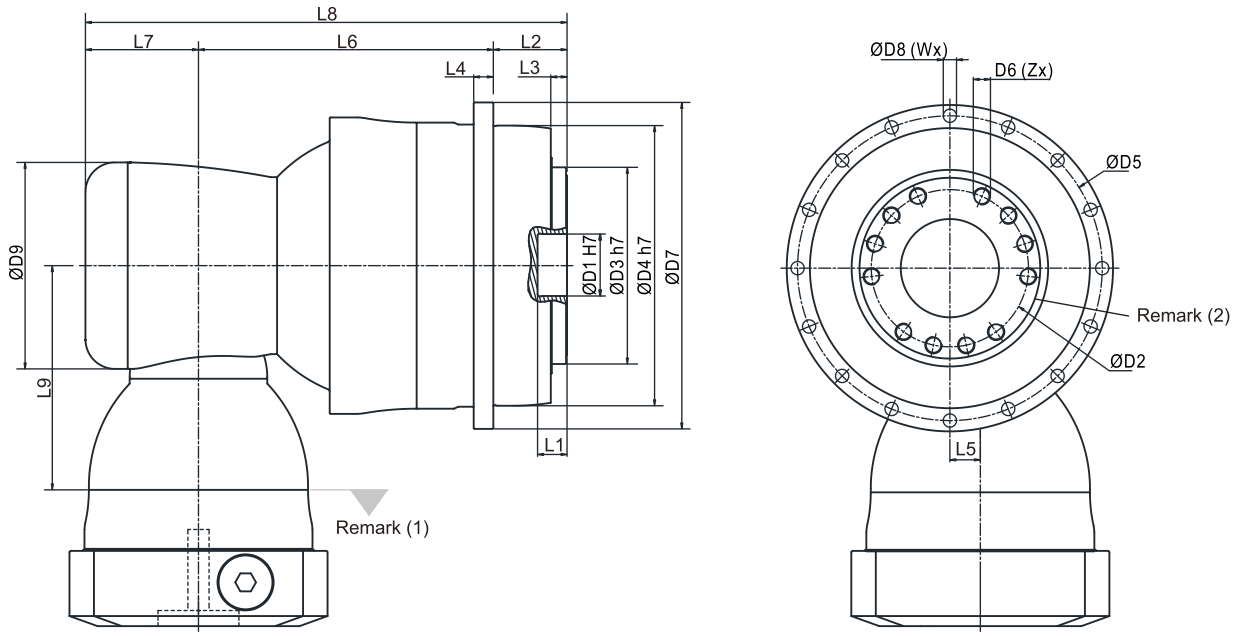

Dimension	AHX285	AHX355	AHX450
D1 H7	100	120	155
D2	160	200	250
D3 h7	200	250	315
D4 h7	285	355	450
D5	310	385	490
D6 x Pitch x Deep	M20x2.5Px31	M24x3Px32	M30x3.5Px40
D7	332	415	530
D8	13.5	17.5	22
D9	210	210	255
L1	16	35	24
L2	75	80	85
L3	16.5	20	20
L4	20	45	60
L5	31	31	36
L6	300	332	447.5
L7	115	115	131
L8	490	527	663.5
L9	228	228	265.5
X in Degree	24	22.5	30
Y in Degree	24	22.5	30
Z	12	16	12
U in Degree	22.5	30	30
V in Degree	22.5	30	30
W	16	12	12

(1) Dimensions are related to motor interface. Please contact APEX for details.
(2) Refer to the AH series(Page 05) for flange interface.

Performance AHXC Gearbox

Model No.		Stage	Ratio(1)	AHXC064	AHXC090	AHXC110	AHXC140	AHXC200	AHXC255	AHXC285	AHXC355	AHXC450
Nominal Output Torque T_{2N}	Nm	2	4	35	80	210	415	1,005	-	-	-	-
			5	35	80	210	415	1,005	2,050	3,250	-	-
			7	30	70	180	350	820	1,750	2,410	-	-
			8	35	80	210	415	1,005	-	-	-	-
			10	35	80	210	415	1,005	2,050	3,250	-	-
		3	21	-	85	220	430	1,065	2,100	3,340	5,320	10,750
			31	-	70	185	365	860	1,790	2,470	5,720	9,100
			46	-	60	155	305	675	1,080	1,890	3,460	7,800
			61	-	70	185	365	860	1,790	2,470	5,720	9,100
			91	-	60	155	305	675	1,080	1,890	3,460	7,800
Emergency Stop Torque T_{2NOT}	Nm	2,3	4~91	2 times T_{2N}								
Max. Acceleration Torque T_{2B}	Nm	2,3	4~91	1.5 times T_{2N}								
No Load Running Torque(3)	Nm	2	4~10	2	2.5	5.8	12	25	48	95	-	-
		3	21~91	1	1.5	2.5	4	9	18.5	35	75	148
Backlash(2)	arcmin	2	4~10	≦3	≦2	≦2	≦2	≦2	≦2	≦2	-	-
		3	21~91	-	≦2	≦2	≦2	≦2	≦2	≦2	≦2	≦2
Torsional Rigidity	Nm/arcmin	2,3	4~91	12	27	56	112	389	642	1,275	2,500	5,100
Nominal Input Speed n_{1N}	rpm	2	4~10	5,000	3,600	3,000	2,300	1,800	1,500	1,100	-	-
		3	21~91	-	4,600	4,000	3,000	2,300	1,800	1,500	1,500	1,100
Max. Input Speed n_{1B}	rpm	2	4~10	7,000	6,000	5,500	4,500	3,500	3,000	2,200	-	-
		3	21~91	-	7,000	6,500	5,500	4,500	3,500	3,000	3,000	2,200
Max. Axial Load F_{2a}(4)	N	2,3	4~91	1,690	2,220	4,070	8,530	17,000	26,900	39,200	101,500	143,700
Max. Tilting Moment M_{2K}(4)	Nm	2,3	4~91	120	280	480	1,310	3,530	5,920	9,230	29,100	63,300
Operating Temp	° C	2,3	4~91	-10° C~ 90° C								
Degree of Gearbox Protection		2,3	4~91	IP65								
Lubrication		2,3	4~91	Synthetic lubrication grease								
Mounting Position		2,3	4~91	All directions								
Running Noise(3)	dB(A)	2	4~10	≦68	≦68	≦68	≦70	≦70	≦72	≦74	-	-
		3	21~91	-	≦68	≦68	≦70	≦70	≦72	≦74	≦74	≦76
Efficiency η	%	2	4~10	≧95%								
		3	21~91	≧93%								

(1) Ratio ($i = N_{in} / N_{out}$) .
(2) Backlash is measured at 2% of Nominal Output Torque T_{2N} .
(3) The dB values are measured by gearbox with ratio 10 (2-stage) or ratio 91 (3-stage), no loading at 3,000 RPM or at the respective Nominal Input Speed by bigger model size.
By lower ratio and/or higher RPM, the noise level could be 3 to 5 dB higher.
(4) Applied to the output flange center at 100 rpm.
(5) Continuous operation is not recommended.
(6) 5 years warranty.

Inertia AHXC Gearbox (Ratio i=4~10 / 21~91)

Model No.		AHXC064	AHXC090		AHXC110		AHXC140		AHXC200		AHXC255		AHXC285		AHXC355	AHXC450
Ø(A) (C3)		2-st.	2-st.	3-st.	2-st.	3-st.	2-st.	3-st.	2-st.	3-st.	2-st.	3-st.	2-st.	3-st.	3-st.	3-st.
8	kg.cm²	0.1	-	0.1	-	-	-	-	-	-	-	-	-	-	-	-
11		0.17	0.52	0.17	-	-	-	-	-	-	-	-	-	-	-	-
14		0.21	0.52	0.21	-	0.52	-	-	-	-	-	-	-	-	-	-
19		0.62	1.69	0.62	1.71	1.69	-	1.71	-	-	-	-	-	-	-	-
24		-	4.89	-	5.05	4.89	6.92	5.05	-	6.92	-	-	-	-	-	-
28		-	-	-	6.55	-	6.98	6.55	-	6.98	-	-	-	-	-	-
32		-	-	-	9.47	-	10.18	9.47	10.18	10.18	-	10.18	-	-	-	-
35		-	-	-	14.91	-	15.21	14.91	15.21	15.21	15.68	15.21	23.46	15.68	-	-
38		-	-	-	20.69	-	20.7	20.69	20.7	20.7	21.69	20.7	23.46	21.69	21.69	-
42		-	-	-	-	-	22.83	-	22.83	22.83	23.59	22.83	25.28	23.59	23.59	25.28
48		-	-	-	-	-	58.45	-	58.45	58.45	59.3	58.45	61.61	59.3	59.3	61.61
55		-	-	-	-	-	-	-	-	-	86.95	-	89.67	-	86.95	89.67
60		-	-	-	-	-	-	-	-	-	-	-	112.49	-	-	112.49

(A) Ø = Input shaft diameter.

Dimension AHXC Gearbox （Ratio i＝4~10 / 21~91）

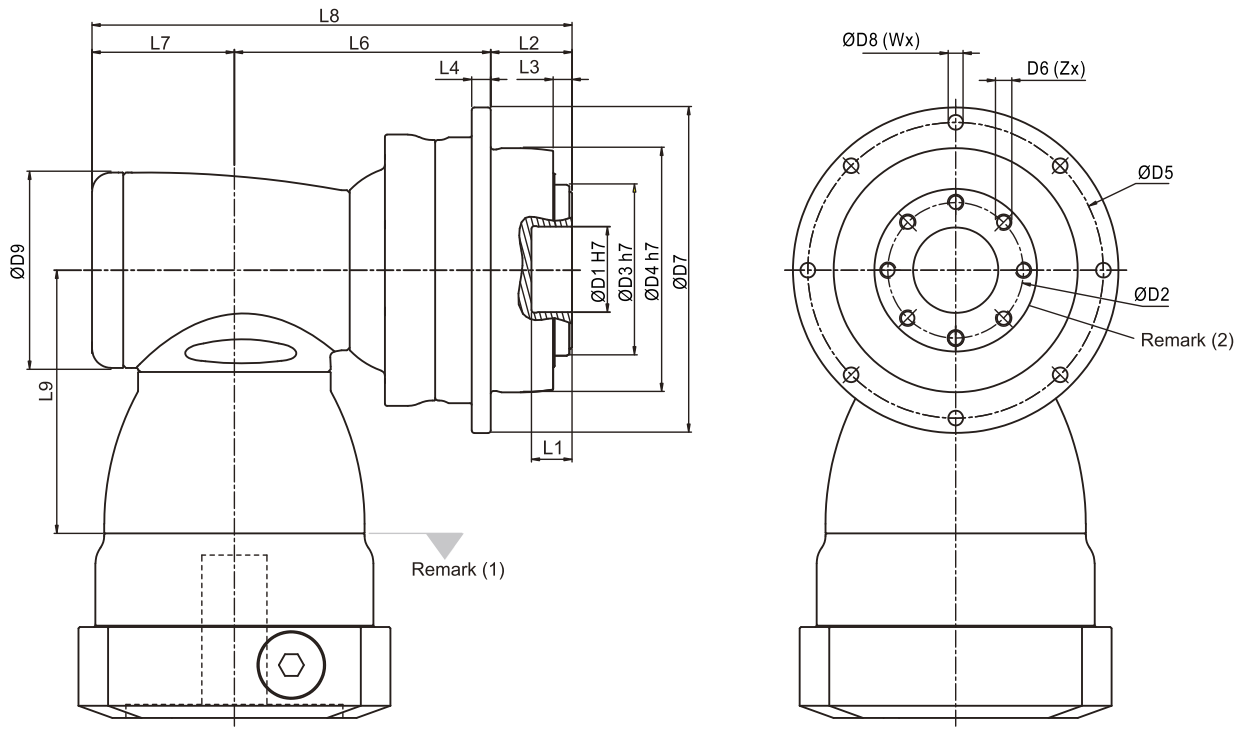

Dimension	AHXC064	AHXC090		AHXC110		AHXC140		AHXC200		AHXC255		AHXC285		AHXC355	AHXC450
	2-st.	2-st.	3-st.	2-st.	3-st.	2-st.	3-st.	2-st.	3-st.	2-st.	3-st.	2-st.	3-st.	3-st.	3-st.
D1 H7	20	31.5		40		50		80		100		100		120	155
D2	31.5	50		63		80		125		140		160		200	250
D3 h7	40	63		80		100		160		180		200		250	315
D4 h7	64	90		110		140		200		255		285		355	450
D5	79	109		135		168		233		280		310		385	490
D6 x Pitch x Deep	M5x0.8Px8	M6x1Px10		M6x1Px11		M8x1.25Px15		M10x1.5Px20		M16x2Px25		M20x2.5Px31		M24x3Px32	M30x3.5Px40
D7	88	120		147		180		249.5		302		332		415	530
D8	4.5	5.5		5.5		6.6		9		13.5		13.5		17.5	22
D9	64	92	64	116	92	156	116	156	156	195	156	240	195	195	240
L1	8	15		15		15		16		16		16		35	24
L2	19.5	30		29		38		50		66		75		80	85
L3	4	7		7		7.5		8.5		13.5		16.5		20	20
L4	5	7		8		10		12		18		20		45	60
L6	92	100.5	121.5	124.5	142	175.5	174.5	185	244.5	199	264.5	265.5	307.5	339.5	463.5
L7	46.5	61.5	46.5	76	61.5	97.5	76	97.5	97.5	105.5	97.5	141	105.5	105.5	141
L8	158	192	198	229.5	232.5	311	288.5	332.5	392	370.5	428	481.5	488	525	689.5
L9	81.5	113.5	81.5	147.5	113.5	196.5	147.5	196.5	196.5	229	196.5	260	229	229	260
X in Degree	45	45		22.5		30		30		24		24		22.5	30
Y in Degree	45	45		22.5		30		30		24		24		22.5	30
Z	8	8		12		12		12		12		12		16	12
U in Degree	45	45		45		30		30		22.5		22.5		30	30
V in Degree	45	45		45		30		30		22.5		22.5		30	30
W	8	8		8		12		12		16		16		12	12

(1) Dimensions are related to motor interface. Please contact APEX for details.
(2) Refer to the AH series(Page 05) for flange interface.

Selection of the optimum gearbox

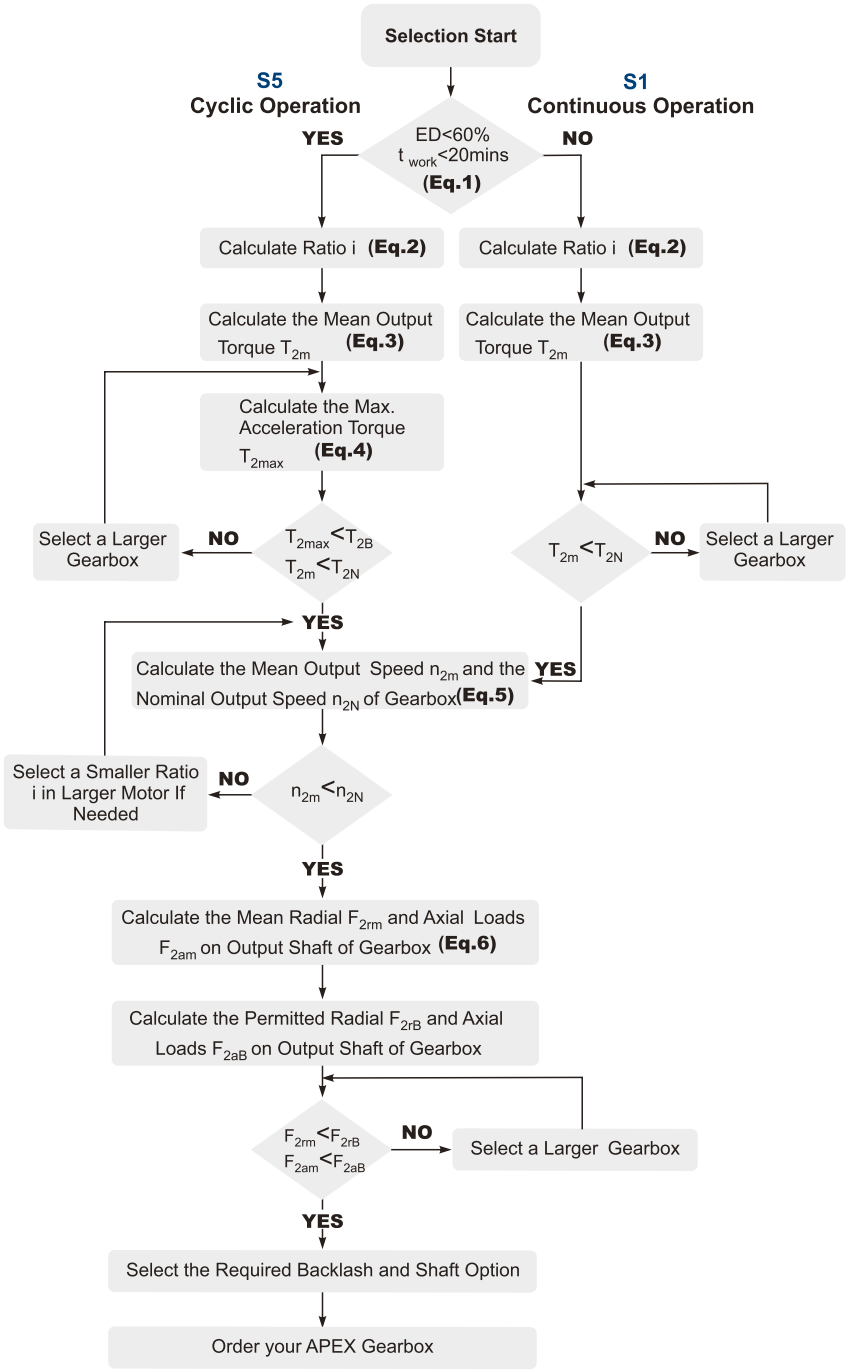

Recommended (for S5 Cycle Operation)

The general design is given for

$$\frac{J_L}{i^2} \leq 4 \times J_m$$

The optimal design is given for

$$\frac{J_L}{i^2} \cong J_m$$

J_L Load Inertia

J_m Motor Inertia

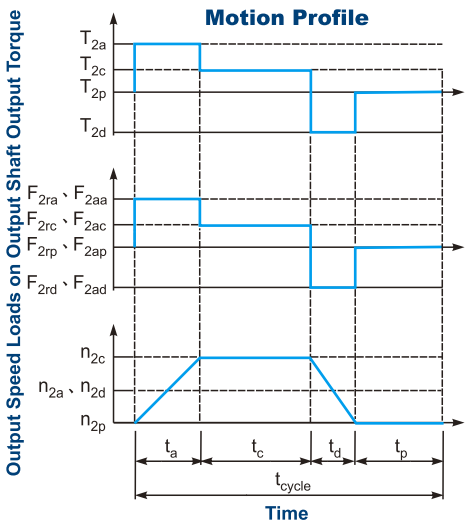

1. $ED = \frac{t_a + t_c + t_d}{t_{cycle}} \times 100\%$, $t_{work} = t_a + t_c + t_d$

Index : a. Acceleration, c. Constant,
d. Deceleration, p. Pause **(Eq.1)**

2. $i \cong \frac{n_m}{n_{work}}$

n_m Output Speed of the Motor

n_{work} Working Speed **(Eq.2)**

3. $$T_{2m} = \sqrt[3]{\frac{n_{2a} \times t_a \times T_{2a}^3 + n_{2c} \times t_c \times T_{2c}^3 + n_{2d} \times t_d \times T_{2d}^3}{n_{2a} \times t_a + n_{2c} \times t_c + n_{2d} \times t_d}}$$

(Eq.3)

4. $T_{2max} = T_{mB} \times i \times K_s \times \eta$

where K_s is

K_s	No. of Cycles / hr
1.0	0 ~ 1,000
1.1	1,000 ~ 1,500
1.3	1,500 ~ 2,000
1.6	2.000 ~ 3,000
1.8	3.000 ~ 5,000

T_{mB} Max. Output Torque of the Motor

η Efficency of the Gearbox **(Eq.4)**

5. $n_{2a} = n_{2d} = \frac{1}{2} \times n_{2c}$

$$n_{2m} = \frac{n_{2a} \times t_a + n_{2c} \times t_c + n_{2d} \times t_d}{t_a + t_c + t_d}$$

$$n_{2N} = \frac{n_{1N}}{i}$$

(Eq.5)

6. $$F_{2rm} = \sqrt[3]{\frac{n_{2a} \times t_a \times F_{2ra}^3 + n_{2c} \times t_c \times F_{2rc}^3 + n_{2d} \times t_d \times F_{2rd}^3}{n_{2a} \times t_a + n_{2c} \times t_c + n_{2d} \times t_d}}$$

$$F_{2am} = \sqrt[3]{\frac{n_{2a} \times t_a \times F_{2aa}^3 + n_{2c} \times t_c \times F_{2ac}^3 + n_{2d} \times t_d \times F_{2ad}^3}{n_{2a} \times t_a + n_{2c} \times t_c + n_{2d} \times t_d}}$$

(Eq.6)

Glossary

Emergency Stop Torque T_{2NOT}	Nm	The Emergency Stop Torque is the maximum permitted torque at the output of gearbox. This may happen only occasionally and may not exceed 1,000 times during the whole service life.
Max. Acceleration Torque T_{2B}	Nm	Under the Cyclic Operation (S5), the Max. Acceleration Torque is the maximum torque which can be transmitted only briefly to the output of gearbox up to 1,000 cycles/hr.
No Load Running Torque	Nm	The No Load Running Torque is the min. torque to overcome the internal friction of a gearbox without loading*.
Nominal Input Speed n_{1N}	rpm	The Nominal Input Speed is the permitted input speed of gearbox by the Continuous Operation (S1) while the housing temperature does not exceed 90°C. This value is measured at environment temperature 25°C.
Max. Input Speed n_{1B}	rpm	The Max. Input Speed is the max. permitted input speed of gearbox by the Cyclic operation (S5). This value is measured at environment temperature 25°C and serves as the absolute limit of the gearbox.
Backlash	arcmin	The Backlash is the maximum angular measurement between two teeth of gears when the transverse operation occurs (refer to Diagram 1). The arcmin is the measurement unit for the backlash. One arcmin equals 1/ 60 degree, symbolized as 1'. 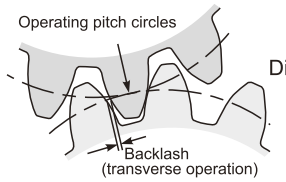 Diagram 1
Torsional Rigidity	Nm/arcmin	Torsional Rigidity is the quotient (△T / △Ø) between the applied torque and resulting torsion angle. This value indicates how much torque is needed on the gearbox to rotate the output shaft for 1 arcmin. The Torsional Rigidity can be determined by Hysteresis Curve. Hysteresis Curve When the input shaft is locked, increase torque at the output slowly up to T_{2B} in both directions and then release the torque gradually. According to the measured torque and torsion angle, a closed curve will be acquired as in the Diagram 2. 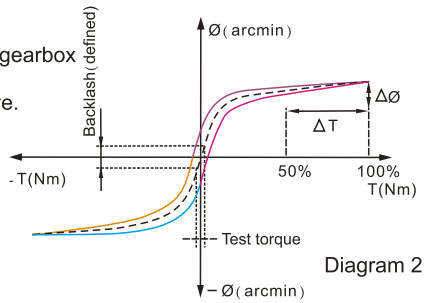 Diagram 2
Radial Load And Axial Load	N	The permitted radial and axial loads on output shaft of the gearbox depend on the design of the gearbox supporting bearings. For more information, please refer to APEX website. 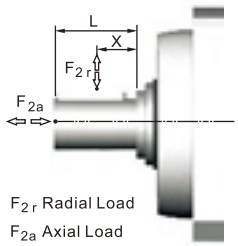
Efficiency η	%	The transmission efficiency of the gears inside a gearbox (without friction).
Operating Temperature	° C	The Operating Temperature indicates the temperature of gearbox housing.
Degree of Protection		IP code stands for International Protection standard. The IP65 as example: the first IP number stands for protection degree against dust; the second IP number stands for protection against liquid.
Lubrication		APEX uses synthetic lubrication grease. Alternate greases are available, please contact APEX.
Running Noise	dB(A)	The Running Noise is measured depends on gearbox size, the ratio and the speed*. Higher speed usually induces higher noise level, while higher ratio induces lower noise level.
Moment of Inertia J_1	$kg.cm^2$	The Moment of Inertia J1 is a measurement of the effort applied to an object to maintain its momentary condition at rest or rotating.
Breakaway Torque	Nm	The Breakaway Torque is the minimum torque to start the rotation from the input side of gearbox. A smaller size or a higher ratio gearbox requests less Breakaway Torque.
Back Driving Torque	Nm	The Back Driving Torque is the minimum torque to start the rotation from the output side of gearbox. A larger size or a higher ratio gearbox requires greater Back Driving Torque.

* This value is measured at environment temperature 25°C and the input speed 3,000 rpm. If the Nominal Input Speed n_{1N} of gearbox is lower than 3,000 rpm, this value is measured by that specific Nominal Input Speed.

APEX TAIWAN NORTH
ANDTEK AUTOMATION CO.,LTD
TEL +886-02-82262655
13F-5, No.2, Jian 8th Rd., Jhonghe Dist., New Taipei City 235, TAIWAN
sales@andtek.com.tw
www.apexdyna.com

APEX TAIWAN CENTRAL
ANDTEK AUTOMATION CO.,LTD
TEL +886-04-23594286
9F-6, No.925, Sec.4, Taiwan Blvd., Xitun Dist.
Taichung City 407 TAIWAN
sales@andtek.com.tw
www.apexdyna.com

APEX TAIWAN SOUTH
MEN JENN ELECTRIC CO., LTD.
TEL +886-06-2337332 ~ 6
No.774, Zhonghua Rd., Yongkang Dist., Tainan City 710, TAIWAN
menjenn@ms24.hinet.net
www.apexdyna.com

APEX DYNAMICS INC. SHANGHAI
TEL +86-21-69220577
No.128 ZHUYING Road QINGPU Industry Area, Shanghai, CHINA
sales@apexdyna.cn
www.apexdyna.cn

APEX DYNAMICS SHENZHEN, LTD.
TEL +86-755-84516325
No. 1102A of D area , CFG mansion ,Bao Yuan Road , Bao' an District , Shenzhen ,CHINA.
sales@szapexdyna.com
www.szapexdyna.com

APEX DYNAMICS BEIJING, LTD.
TEL +86-10-69570691
NO.1,YaoPingRoad,SongZhuang Town, Tongzhou istrict, Beijing, CHINA.
bjapexdyna@163.com
www.bjapex.cn

CHONGQING APEX DYNAMICS CO., LTD.
TEL +86-23-67686860
406, Building 5, No.68,Jinyu Avenue, Beibu New Area, Chongqing, CHINA
sales@cqapexdyna.com
www.apexdyna.com

APEX (XIAMEN) DYNAMICS TECHNOLOGY CO., LTD.
TEL +86-0592-720-5279
Unit B-3,1F.,No.129,Jingquan Road, Jimei District, Xiamen, Fujian, CHINA
sales@xmapexdyna.com
www.xmapexdyna.com

APEX DYNAMICS USA, INC.
TEL +1-631-2449040
885 Marconi Avenue Ronkonkoma, NY 11779
U.S.A.
sales@apexdynamicsusa.com
www.apexdynamicsusa.com

APEX DYNAMICS KOREA
TEL +82-31-8179992
1246-32, Seongsuk-dong, Ilsandong-gu, Goyang-city, Gyeonggi-Do, KOREA (R.O.K) 410-570
sales@apexdynakorea.co.kr
www.apexdynakorea.co.kr

APEX DYNAMICS JAPAN
TEL +88-092-4511202
1-3-46, Hanmichibasi, Hakata-ku, Fukuoka, 812-0897, JAPAN
sales@apexdyna.jp
www.apexdyna.jp

APEX DYNAMICS SINGAPORE PTE LTD
TEL +65-62-626228
3 South Buona Vista Road, #05-15 & #06-15. SINGAPORE 118136
sales@apexdyna.com.sg
www.apexdyna.com.sg

APEX DYNAMICS (THAILAND) CO., LTD.
TEL +66-2-3266233
73 Soi Ladkrabang 30, Kadkrabang Rd.,Bangkok 10520, THAILAND
sales@apexdyna.co.th
www.apexdyna.co.th

APEX DYNAMICS BV
TEL +31-492-509995
Churchilllaan 101 5705 BK Helmond, NETHERLANDS
sales@apexdyna.nl
www.apexdyna.nl
www.apexdyna.be

APEX DYNAMICS
POLSKA SP. Z O.O.
TEL +48-12-6304728
Krakowska 50, 32-083 Balice, POLAND
sales@apexdyna.pl
www.apexdyna.pl

APEX DYNAMICS SPAIN, S.L.
TEL +34-93-6562990
Poligono Industrial Molí dels Frares, Calle C nº 12,08620 - Sant Vicenç dels Horts, Barcelona, SPAIN
apexdyna@apexdyna.es
www.apexdyna.es

LIMAN TRADING LIMITED FZC LLC
P.O. Box 97 , Postal Code 322, Corporate Parks, Sohar Free Zoon, Oman

APEKS REDUKTOR VE DISLI SAN. TIC. LTD. STI.
TEL +90-232-4589960
10042 Sok.No:10 AOSB Çiğli-İzmir, TURKEY
sales@apexdyna.com.tr
www.apexdyna.com.tr

APEX DYNAMICS AUSTRALIA PTY LTD.
TEL +613-95-852739
36 Taunton Drive, Cheltenham, Victoria 3192 AUSTRALIA.
sales@apexdyna.com.au
www.apexdyna.com.au

APEX DYNAMICS (I) JV
TEL +91-80-55345541
GAT NO. 279, KHED SHIVAPUR BAUG, TALUKA HAVELI PUNE- 412205 INDIA.
sales@apexdyna.co.in
www.apexdyna.co.in

APEX DYNAMICS FRANCE SAS
TEL +33-160-135097
11 - Burospace F - 91570 - Bièvres, FRANCE
info@apexdyna.fr
www.apexdyna.fr

APEX DYNAMICS SWEDEN AB
TEL +46-75-2424444
Fredrikbergsgatan 2 SE-573 92 Tranås, SWEDEN
sales@apexdyna.se
www.apexdyna.se

PT.APEX DYNAMICS INDONESIA
TEL +62 21 2928 3681
Rukan Aralia Blok HY43 no.11, Harapan Indah II, Bekasi - Jawa Barat, INDONESIA 17214
sales@apexdyna.co.id
www.apexdyna.co.id

APEX Dynamics Germany GmbH
Telefon +49 (0)7171-798069-0
Marie-Curie-Str. 25, D-73529 Schwäbisch Gmünd, GERMANY
info@apexdynamics.de
www.apexdynamics.de

APEX DYNAMICS CZECH S.R.O.
TEL +420-577-663877
tř. Tomáše Bati 1851 765 02 Otrokovice ČESKÁ REPUBLIKA
info@apexdynaczech.cz
www.apexdynaczech.cz

APEX DYNAMICS РОССИЯ
TEL +7-495-2255452
+7-495-6462422
г.Москва, ул. Южнопортовая, дом 7, строение "С", 3-й этаж
info@apexdynarussia.ru
www.apexdynarussia.ru

APEX DYNAMICS UK
TEL +44-0121-737-1170
Heath House, Cheadle Rd, Uttoxeter, ST14 7BY, UK
mikeg@apexdynauk.com
www.apexdynauk.com

APEX Dynamics Switzerland AG
Tel. +41 (0)55 451 70 20
Obergasse 40, CH-8854 Galgenen, Switzerland
info@apexdyna.ch
www.apexdyna.ch

APEX DYNAMICS MOTION SDN BHD
TEL +60 7237 1055
No.1, Jalan Perniagaan Setia 3, Taman Perniagaan Setia, 81100 Johor Bahru, Johor, MALAYSIA (Setia Business Park 2 @ Iskandar Malaysia)
sales@apexdyna.com.sg
www.apexdyna.com.sg

APEX DYNAMICS BRAZIL
TEL +55-47-30298700
Rua Senador Petrônio Portela, 47 - Bloco 5, Zona Industrial Norte - CEP 89218-575 - Joinville (SC)
lucan@neoyama.com.br
adriano.duarte@neoyama.com.br
www.neoyama.com.br

APEX DYNAMICS ITALY
TEL +39 02.36634521
VIA E. DE AMICIS, 2 – 20091 BRESSO (MI)
info@apexdynamics.it
www.apexdynamics.it

APEX Dynamics Austria GmbH
Telefon +43 720 788416
Marie-Curie-Str. 25, D-73529 Schwäbisch Gmünd, GERMANY
info@apexdynamics.at
www.apexdynamics.at

UAB "APEXO DINAMIKA"
TEL +370 52078165
Medaus g. 28A,
Medininku k., Vilniaus r. Sav.
LT-13192
info@apexdyna.lt

APEX DYNAMICS, INC.

No10. Keyuan 3rd RD.Situn District, Taichung City 40763, Taiwan (R.O.C)
Tel:886-4-24650219 | Fax:886-4-24650118
sales@apexdyna.com | http://www.apexdyna.com

APEX-2019-04-PII/PIIR SERIES-2.0E-TWN
Printed in Taiwan